(IN) HP488D / CORDLESS HAMMER DRIVER DRILL

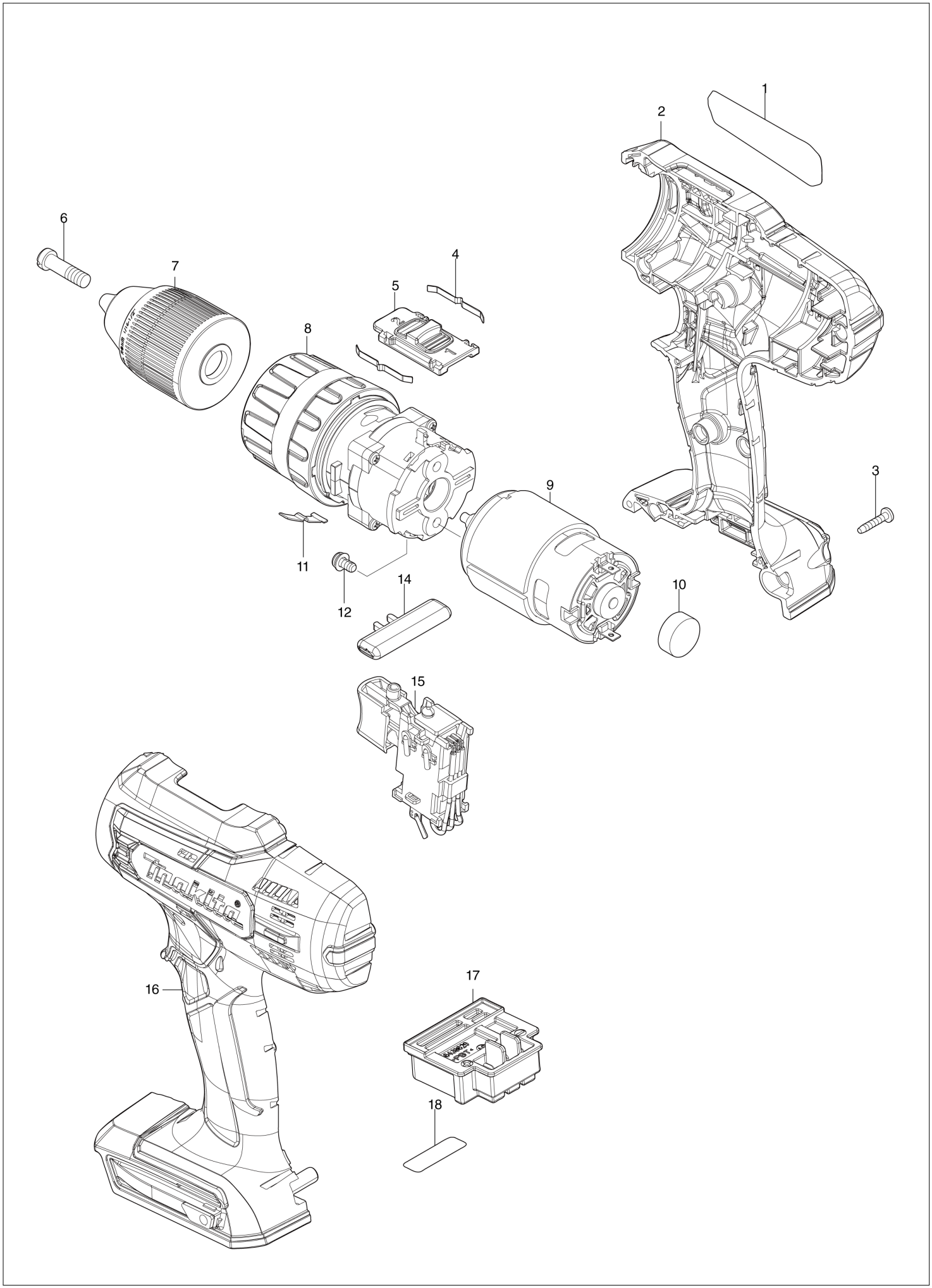

IN	INDIA

HP488D / CORDLESS HAMMER DRIVER DRILL

Item	Sub	Parts No.	Parts Description	Qty	I/C	E/C No.	Close No.	Remark
001		858A41-4	HP488D NAME PLATE	1				
002		183R93-1	HOUSING SET	1				
	C10	252126-6	HEX. LOCK NUT M4-7	2				
	D10		INC. 16					
003		266429-2	TAPPING SCREW 3X16	9				
004		232220-0	LEAF SPRING	2				
005		127754-5	SPEED CHANGE LEVER ASSEMBLY	1				
	C10	233438-6	COMPRESSION SPRING 4	2				
006		251468-5	- FLAT HEAD SCREW M6X22	1				
007A		766004-9	KEYLESS DRILL CHUCK 13	1			DB895	
007B		766004-9	KEYLESS DRILL CHUCK 13	1			DB895	
007-1A		763260-2	KEYLESS DRILL CHUCK 13	1	O	DB895		
007-1B		763260-2	KEYLESS DRILL CHUCK 13	1	O	DB895		
007-1C		763260-2	KEYLESS DRILL CHUCK 13	1				
007-1D		763260-2	KEYLESS DRILL CHUCK 13	1				
008		127732-5	GEAR ASSEMBLY	1				
009		629937-8	DC MOTOR	1				
010		421940-3	CAP	1				
011		232182-2	LEAF SPRING	1				
012		911108-4	PAN HEAD SCREW M4X8	2				
014		452399-3	F/R CHANGE LEVER	1				
015		638887-6	SWITCH UNIT	1				
	C30	654086-2	RECEPTACLE	2		DE372		
	C40	654199-9	RECEPTACLE	2		DE372		
016		183R93-1	HOUSING SET	1				
	C10	252126-6	HEX. LOCK NUT M4-7	2				
	D10		INC. 2					
017		643862-9	TERMINAL	1				
018		858A45-6	HP488D SERIAL NO. LABEL	1				
A01		784637-8	+- BIT 2-45	1				
A02A		***DC18WA	DC18WA BATTERY CHARGER	1				
	D10		COMPO-PARTS					
A02B		***DC18WA	DC18WA BATTERY CHARGER	1				
	D10		COMPO-PARTS					
A02C		***DC18WB	DC18WB BATTERY CHARGER	1				
A02D		***DC18WB	DC18WB BATTERY CHARGER	1				
A03A		199363-0	BATTERY BL1815G SET	2				
A03C		199363-0	BATTERY BL1815G SET	2				
A04		452652-7	BATTERY COVER	1				
A05		821844-3	PLASTIC CARRYING CASE	1				
	C10	455522-9	SLIDE LATCH	2				
A06A		8027B7-6	HP488DWE PLASTIC CASE LABEL	2				
A06B		8028Y3-1	HP488DWAE PLASTIC CASE LABEL	2				
A06C		8044G4-5	HP488D002 PLASTIC CASE LABEL	2				
A06D		8044G5-3	HP488D006 PLASTIC CASE LABEL	2				
A07B		191N74-7	BATTERY BL1820G SET	2		Y08739		
A07D		191N74-7	BATTERY BL1820G SET	2		Y08739		
F01		196306-3	KEYLESS DRILL CHUCK 13 SET	1				

A:HP488DWE(H)
B:HP488DWAE(H)
C:HP488D002(H)
D:HP488D006(H)

Interchange
O : Yes
X : No
< : the new part can be substituted for the current.
> : the current part can be substituted for the new.
S : Interchangeable as a set.